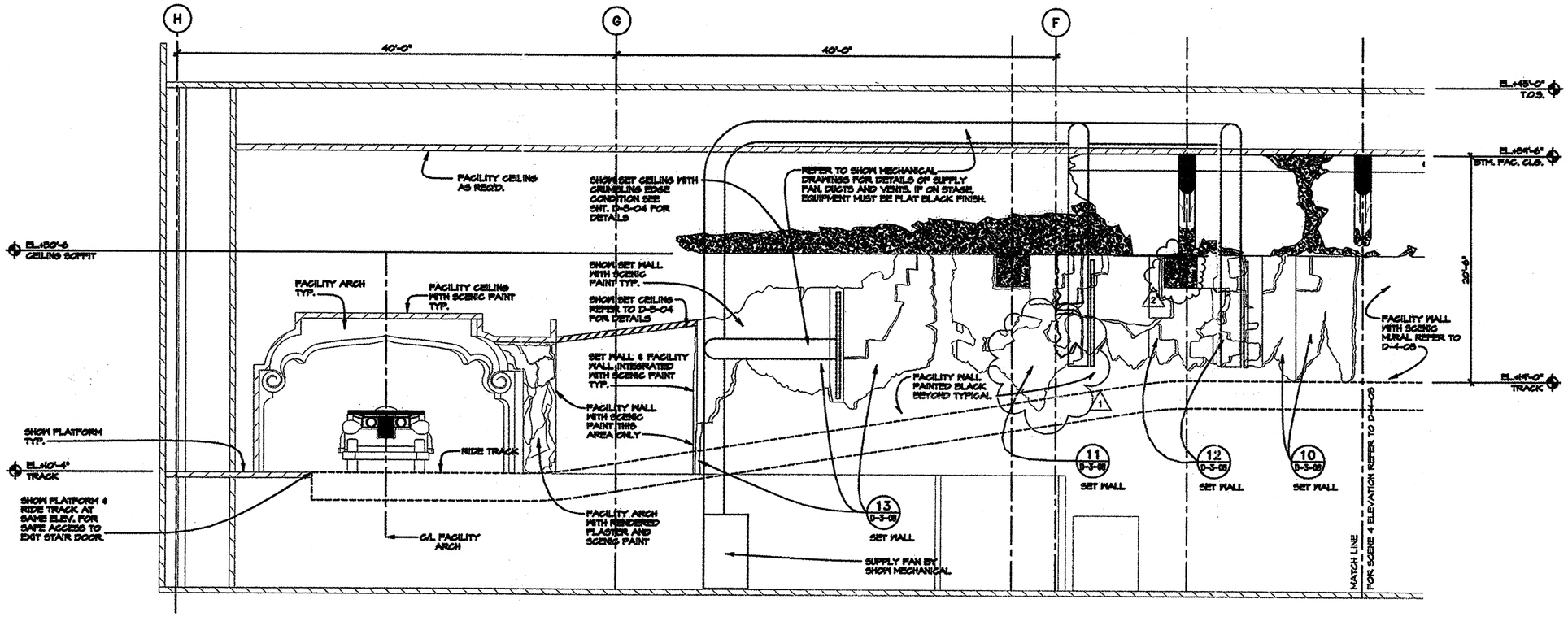


SECTION SCENE 3 TUNNEL OF TORMENT

SCALE: 1/4" = 1'-0"

B D-3-01 D-3-03

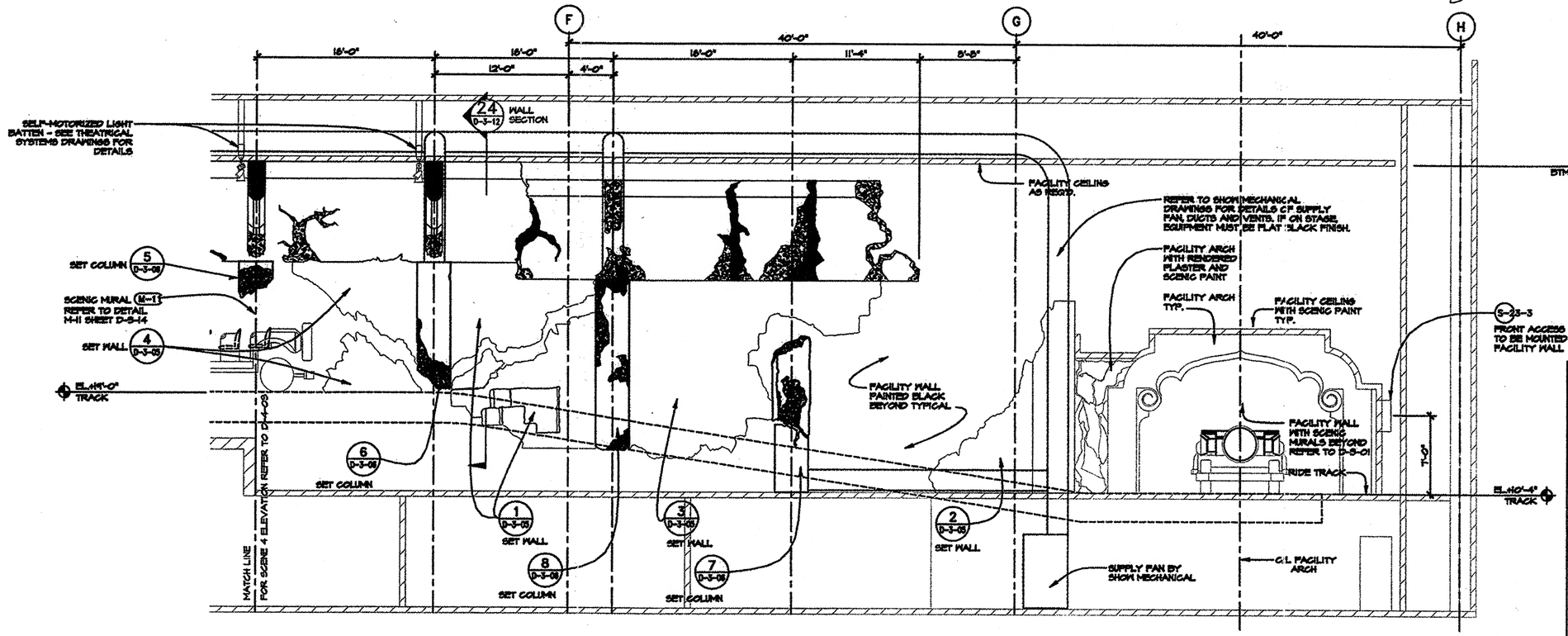


SECTION SCENE 3 TUNNEL OF TORMENT

SCALE: 1/4" = 1'-0"

A D-3-01 D-3-03

## LEGEND:

- TEXTURED HATCH INDICATES AREAS WHICH WILL BE PHYSICAL DIMENSIONAL DECAY (e.g. PYROCURE AND BACKING.)
- SOLID HATCH INDICATES AREAS WHERE PHYSICAL SEPARATION OCCURS BETWEEN THE SET.
- ALL OTHER NON-HATCHED AREAS OF SET WORK WILL BE SCENICALLY PAINTED AS PER MODEL.

FOR ALL AREAS REFER TO MODEL AND ART DIRECTOR FOR FINAL CHARACTER AND INTENT.

GENERAL NOTES:

- SHOW SET DRAWINGS SERVE AS A COORDINATION TOOL DESCRIBING THE FORM AND DESIGN OF THE SHOW. FINAL FINISH AND CHARACTER IS DETERMINED BY THE ART DIRECTOR.
- REFER TO MODEL AND ILLUSTRATIONS FOR GENERAL ART DIRECTION AND INTENT (CHARACTER AND THEMING).
- REFER TO FACILITY DRAWINGS FOR CURRENT STRUCTURAL AND ARCHITECTURAL INFORMATION.

| REV. | DATE | DESCRIPTION OF REVISIONS |
|---|---|---|
| 1 | 12/10/93 | FACILITY COMPLETION PACKAGE |
| 2 | 12/10/93 | SHOW BEAM LOCATION |
| 3 | 9/24/93 | SSS RELEASE FOR PRODUCTION |
| 4 | | |
| 5 | | |
| 6 | | |
| 7 | | |
| 8 | | |
| 9 | | |
| 1 | 12/10/93 | SPEAKER POSITION |

ISSUED FOR:

NOTICES:

THE DATA IN THIS DOCUMENT INCORPORATE PROPRIETARY RIGHTS OF WALT DISNEY IMAGINEERING, 1401 FLOWER STREET, GLENDALE, CALIFORNIA. DISCLOSURE, USE OR REPRODUCTION OUTSIDE THE SCOPE OF DISCLOSURE AND ASSOCIATED WORK IS PROHIBITED WITHOUT THE WRITTEN CONSENT OF WALT DISNEY IMAGINEERING.

CONTRACTOR SHALL VERIFY ALL DIMENSIONS ON JOB SITE & NOTIFY THE PROJECT ENGINEER OF ANY VARIATIONS FROM DIMENSIONS SHOWN THEREON BEFORE PROCEEDING WITH ANY CONSTRUCTION.

KEY PERSONS AND APPROVALS

PROJECT MANAGER: DAVID TODD
TECHNICAL DIRECTOR: VAL LISLE
PRODUCTION DESIGNER: SUSAN BONDS
PROJECT COMPUTER REGISTER: DAVID EDMINISTER
DRAWN: ZUBER / PECHSTEDT
APPROVED:
DATE: 11/3/93
1/4" SCALE: D-3-03

Walt Disney Imagineering
1401 Flower Street Glendale, California 91221-5000 (818) 544-6500

PROJECT DESIGNED FOR: Disneyland ANAHEIM, CALIFORNIA

PROJECT AREA: ADVENTURELAND
UNIT NAME: INDIANA JONES EXPEDITIONS
W.B.S. NO.:
SHEET TITLE: SCENE 3: SECTIONS TUNNEL OF TORMENT

PHASE: CD
PROJECT CODE NUMBER:
DRAWING NO.: D-3-03
REVISION NO.: 1

NAME: P:\SHARED\INDY\AF\DD\WP\SC3\D-3-03.DWG DATE: DEC 14, 1993 TIME: 3:52 PM